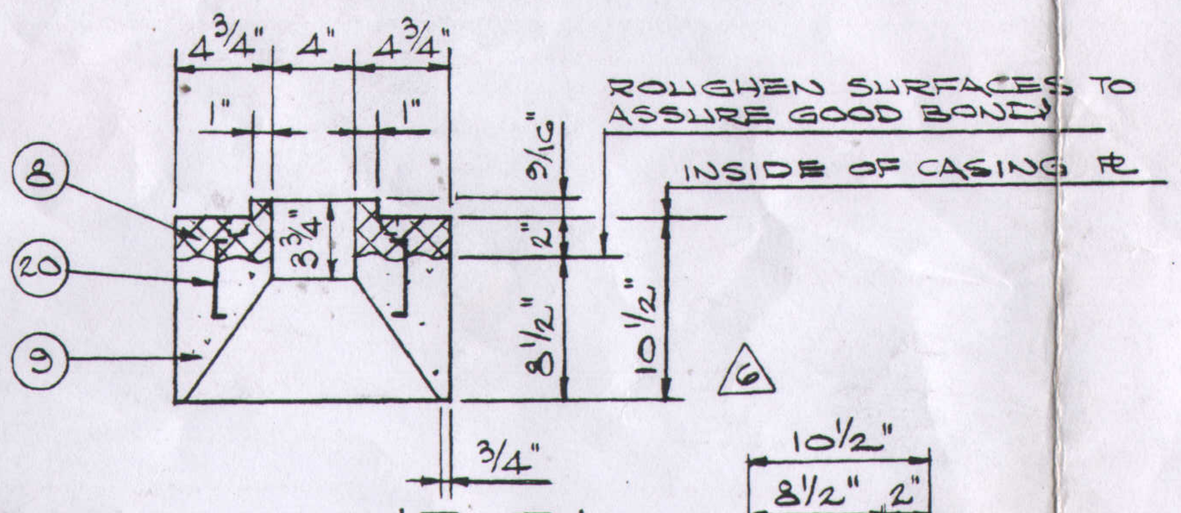

SECTION 'B-B'

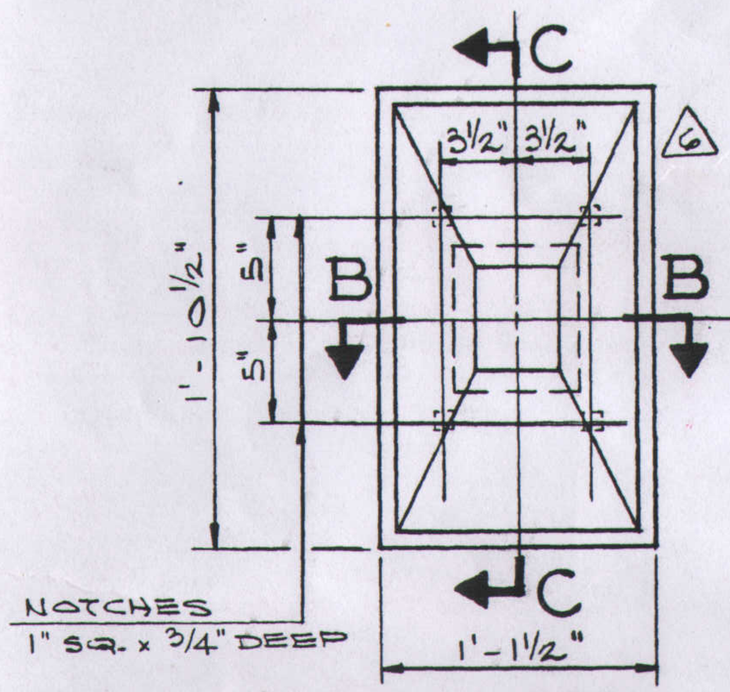

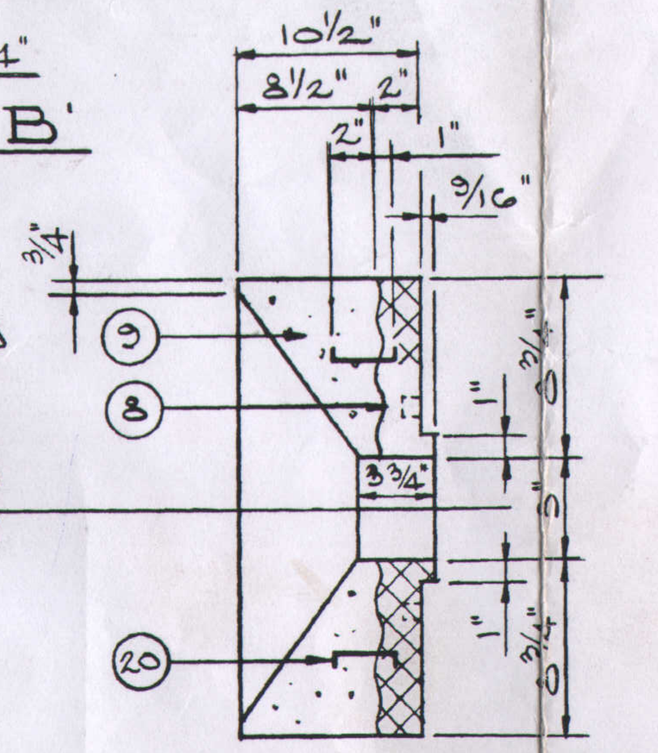

SECTION 'C-C'

Nº 4

QUANTITY PER PEEP DOOR TILE-
ITEM Nº 8 = 10.2#
ITEM Nº 9 = 80#

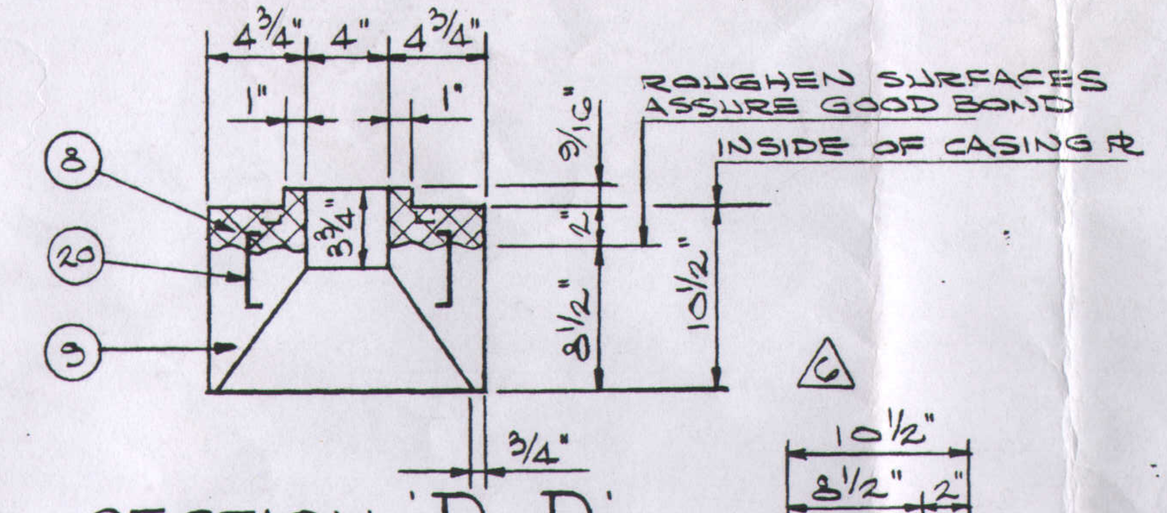

SECTION 'D-D'

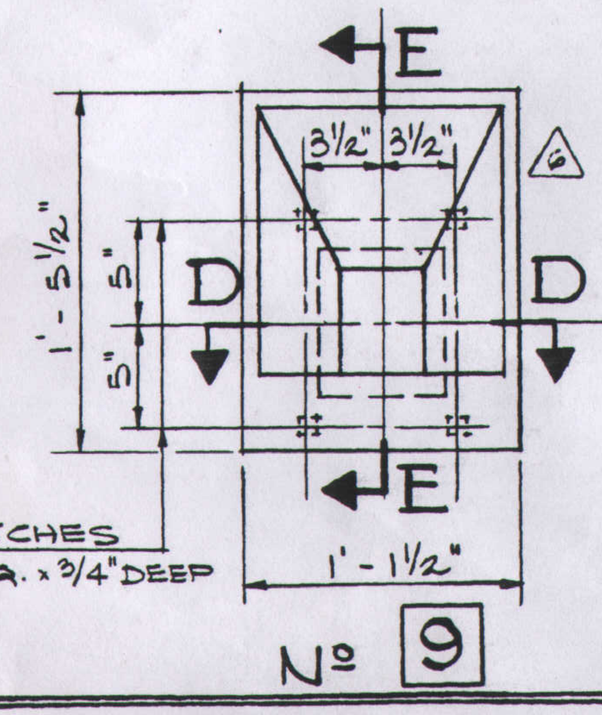

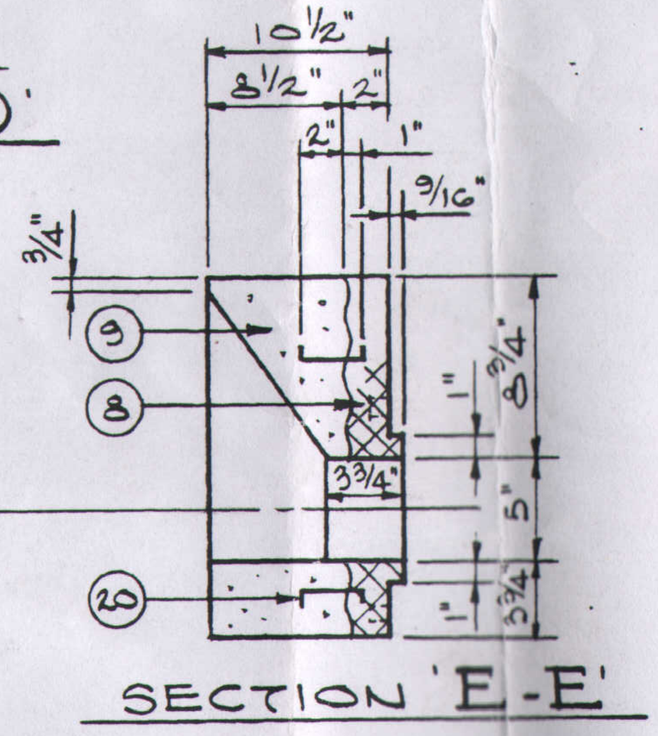

SECTION 'E-E'

Nº 9

QUANTITY PER PEEP DOOR TILE-
ITEM Nº 8 = 8.4#
ITEM Nº 9 = 73#

FIELD INSTALLE

FIELD INSTALL

FURNISHED BY STEEL FABRICATOR

1 1/2"-SCH. 80 PIPE (THREAD ONE END)

1 1/2"-3000# SCRD. CPLG. & PLUG

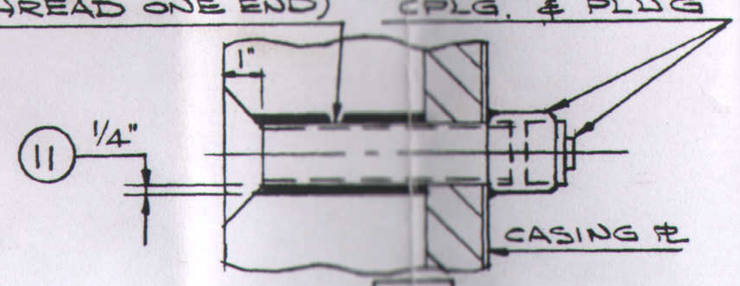

Nº 12

(D.A., D.G., F.G.S., S.S. & T.W. CONNECTIONS)

ON ALL ARCH BRICKS ITEM Nºs 34 & 35 MORTAR 4 1/2" x 9" SIDES ONLY.

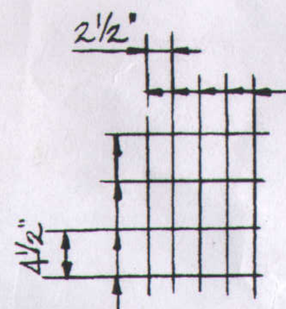

NO MORTAR ON 2 1/2" x 9" SIDES DRY JOINTS

Nº 13

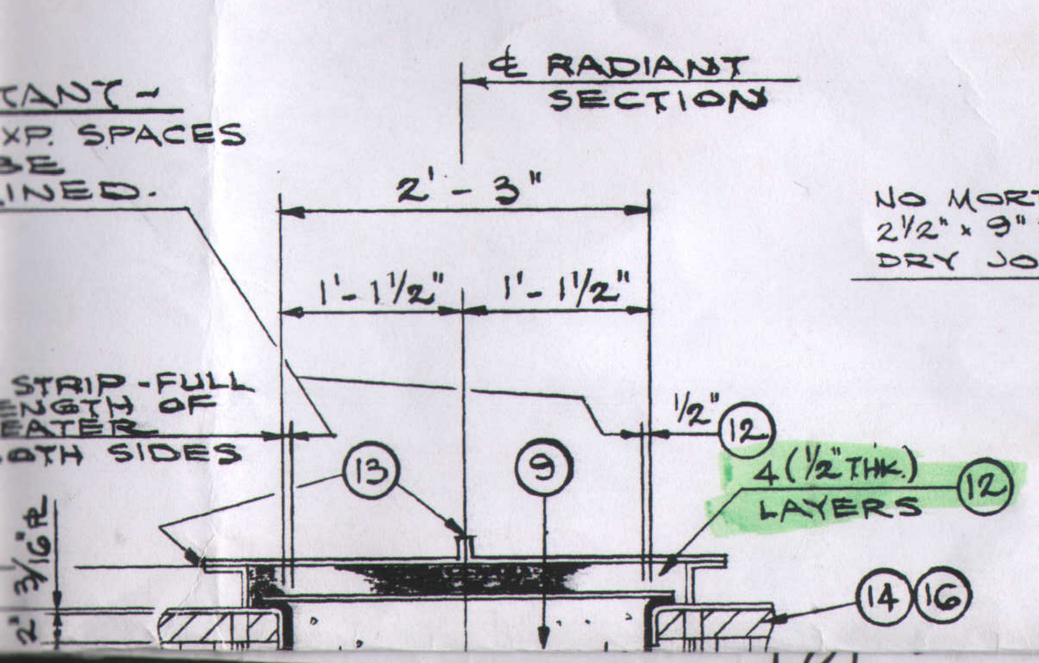

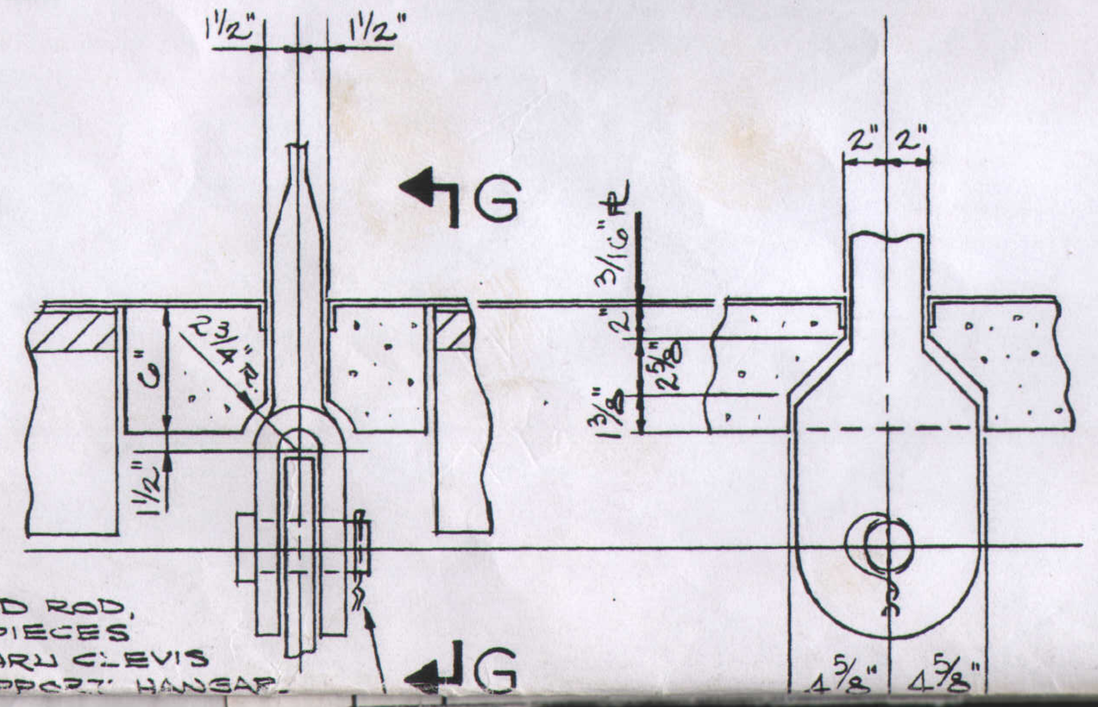

1/4" ϕ 25-20 WELD ROD, ITEM Nº 22, 14 PIECES 1'-0" LG. USE THRU CLEVIS PIN IN TUBE SUPPORT HANGAR.

SHOP INSTALL

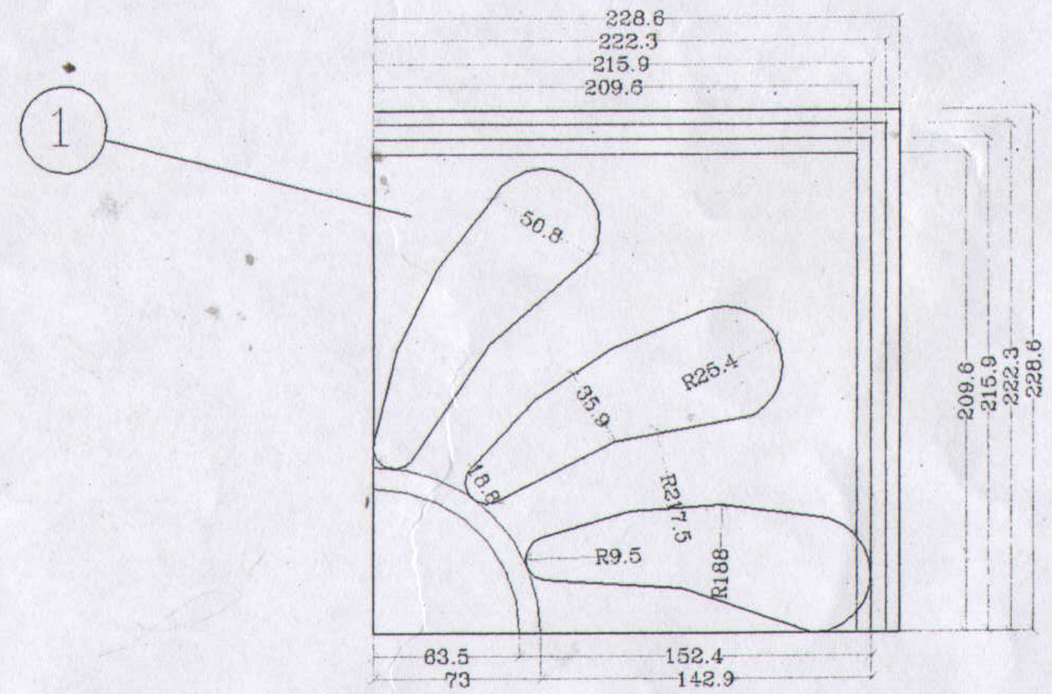

Top Section

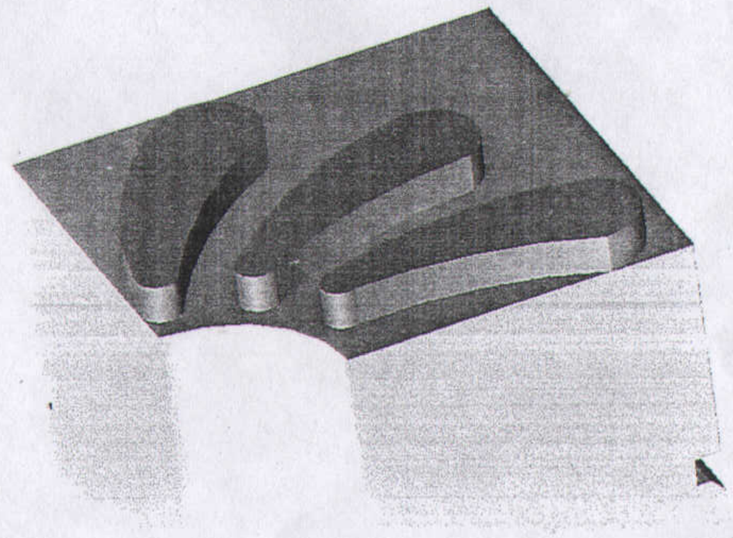

3D Section

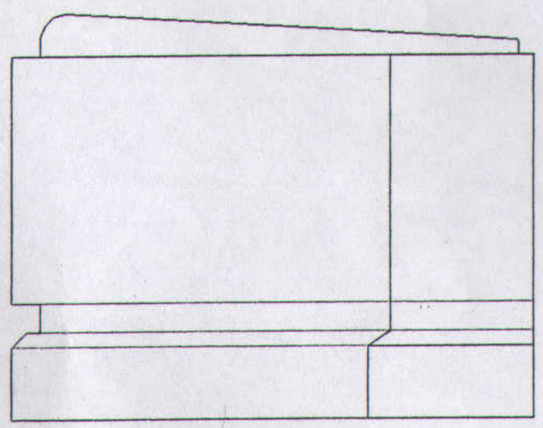

Front Section

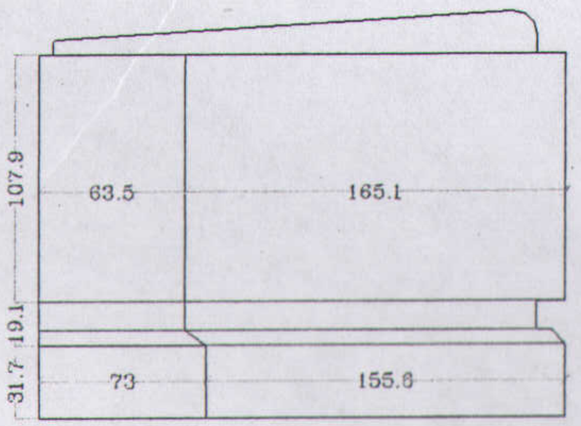

1	PILCAST LX – 85
No.	MATERIAL

ATOOR
Refractories co.

	DATE	NAME
DRAWN	12.12.04	Kamiar Foladlou
CHECKED	13.12.04	Mehdy Khandoozi

Replaced By Drawing	DATE	NAME

No.	DATE	NAME	REVISION

DRAWING TITLE : Burner Block Type MPS – 3R

AREA : Olefin Unit

CUSTOMER : Abadan Petrochemi Co.

PLANT:

	SIZE	SCALE	Sheet No.	REVISION
PROJECT No: PE. AB. 0001	A4	1/55	02/02	00

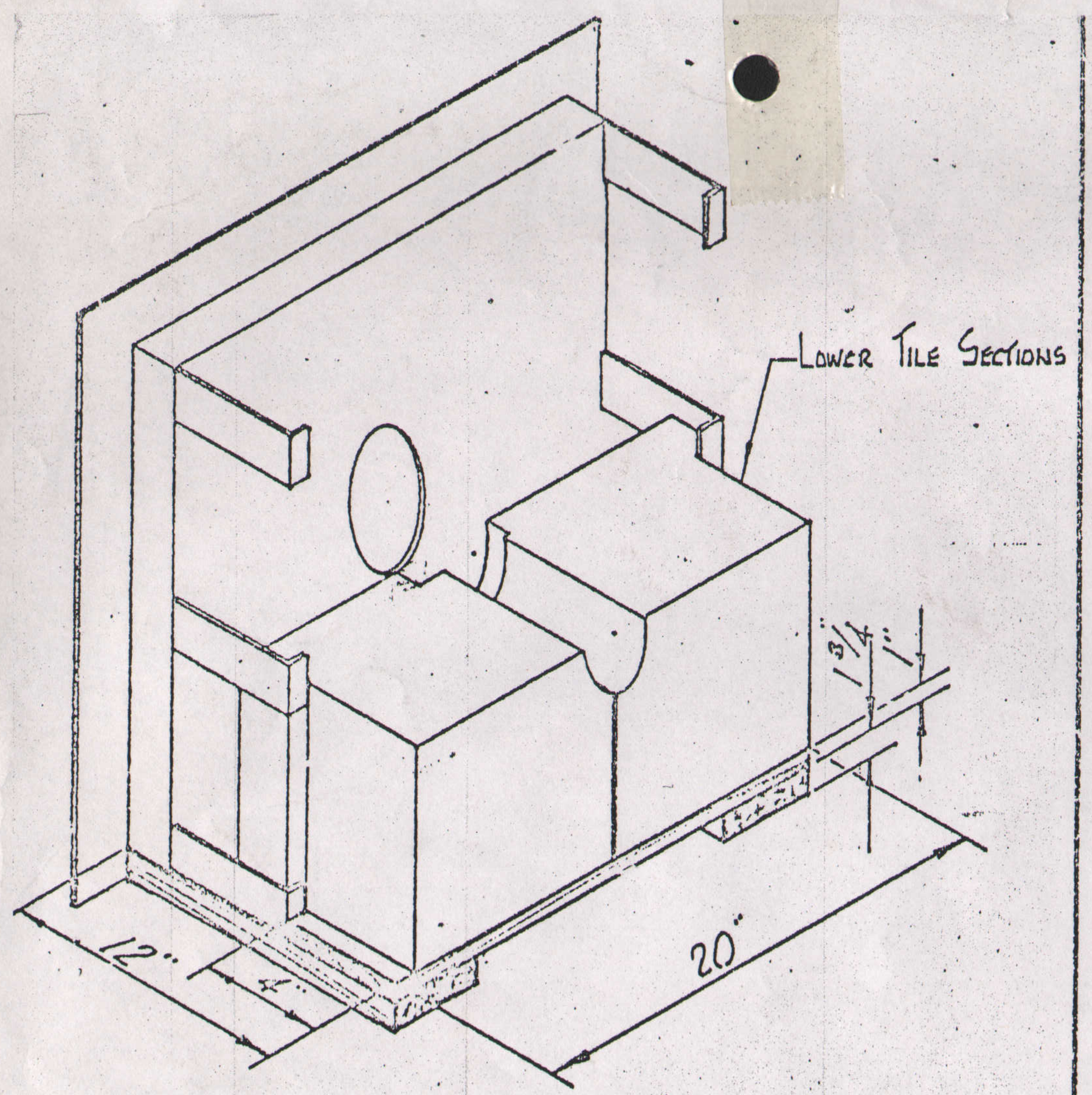

SKETCH "A"

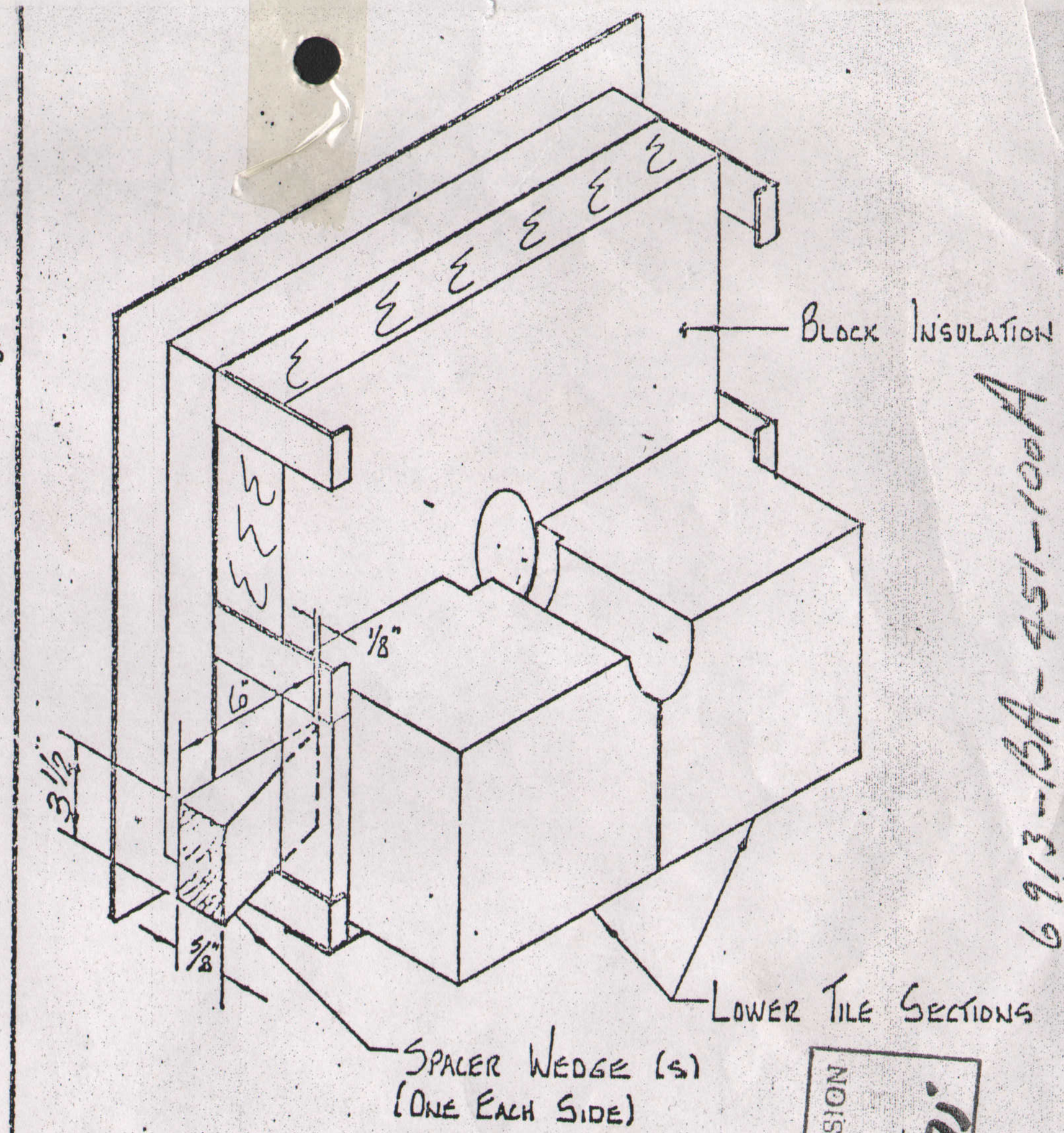

SKETCH "B"

PC EXPANSION
FILES
DATE: 3/72

NOTE: THE WEDGES ARE TO BE REMOVED AFTER INST'L. OF THE UPPER TILE SECTIONS & MORTOR IS SUFFICIENTLY SET.

JOHN ZINK COMPANY
TULSA OKLAHOMA

DETAIL LUM-3R TILE INSTALLATION INSTRUCTIONS

6913-164-451-100A

41.14.54.241.3

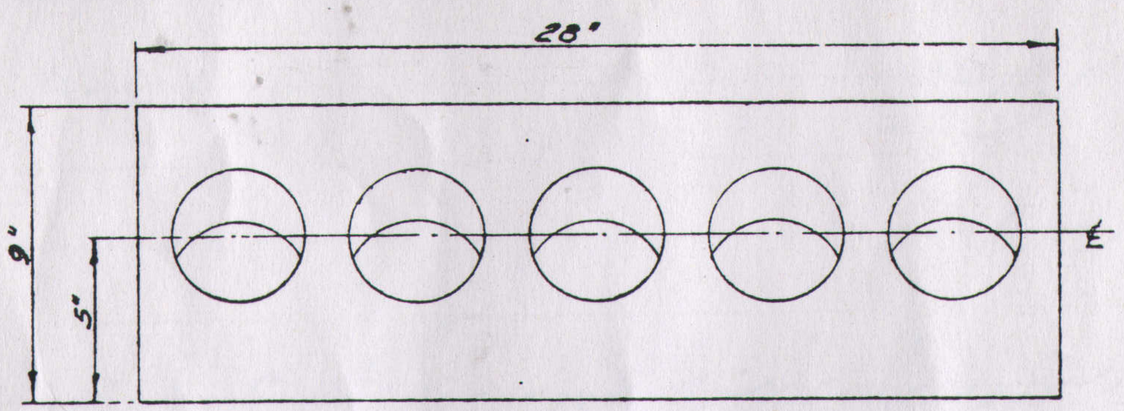

PLAN VIEW OF TILE

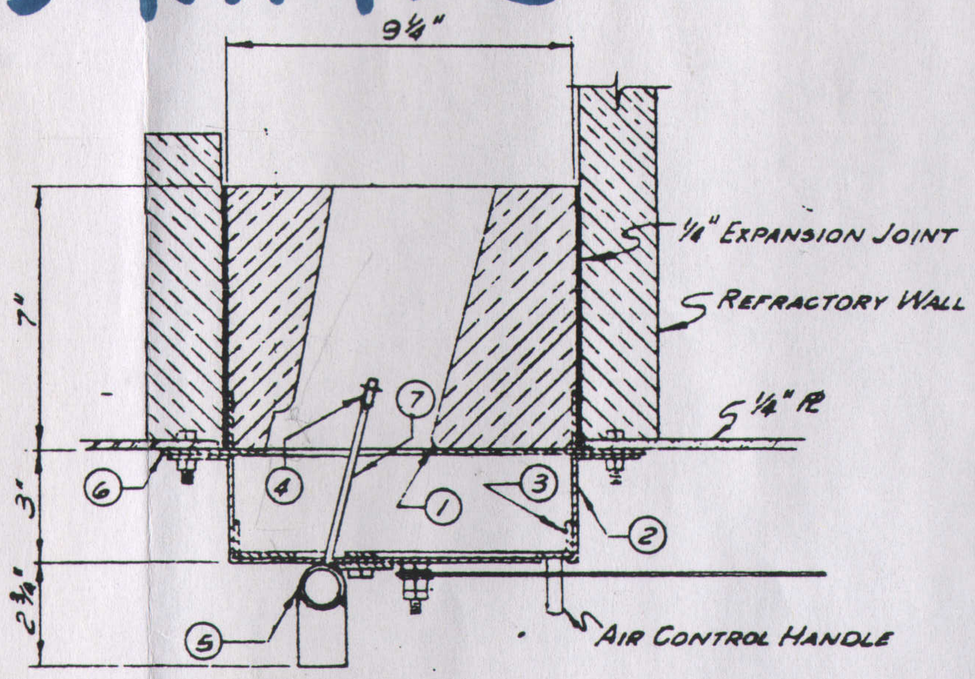

PART SECTIONAL ELEVATION

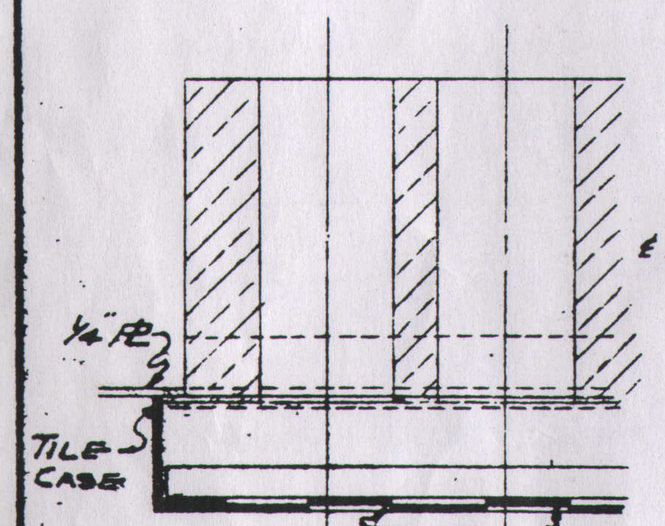

SECTION "A-A"

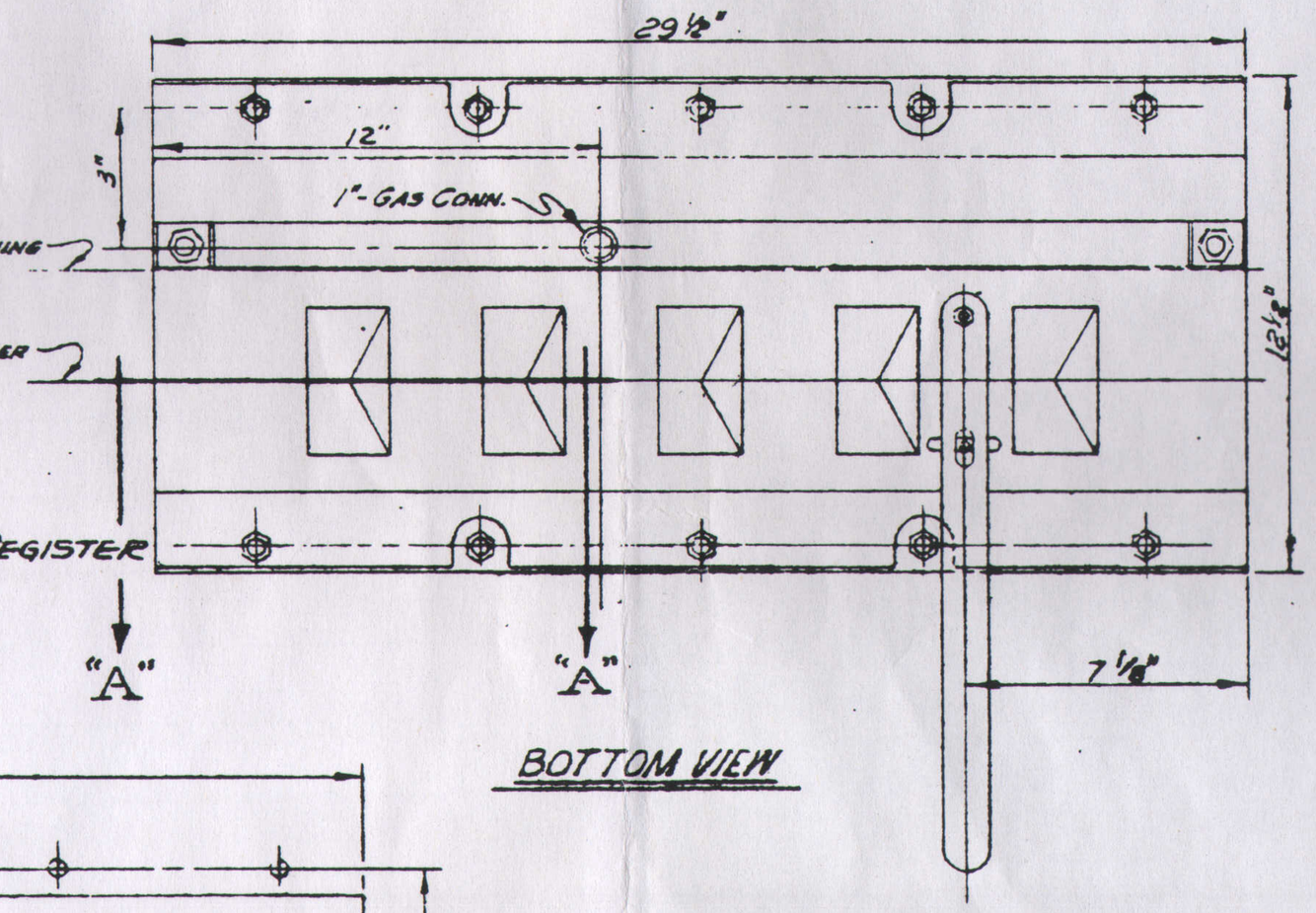

BOTTOM VIEW

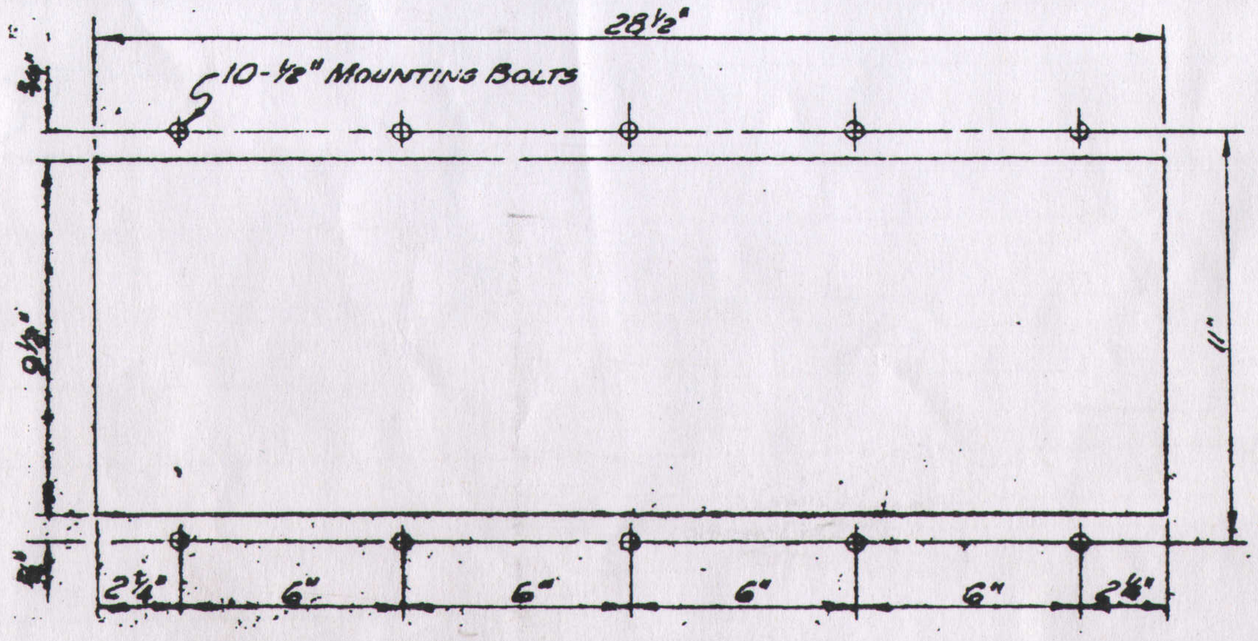

MOUNTING DETAIL

T6039-BA401/402-100A

7-31-67

APPROVED
THE LUMMUS COMPANY
BY 7/24/67

PARTS LIST PER BURNER

ITEM	QTY	DESCRIPTION	PART NO	MAT'L
1	1	BURNER TILE	MV-T-5	BFC *
2	1	STATIONARY AIR REGISTER	MV-2-5	STEEL
3	1	ADJUSTABLE AIR REGISTER	MV-2A-5	"
4	5	GAS TIPS	MV-5-5	SS
5	1	GAS MANIFOLD	1"-SCH 80	STEEL
6	1	TILE CASE (12½" x 29½")	3/16" PL	"
7	5	GAS TIP-NIPPLES	⅛" PIPE	"

*-BFC FIRST QUALITY OR EQUAL

HEAT RELEASE PER BURNER: (NET)
MAX: 1,805,000 BTU/HR @ 5 PSIG.
NORM: 1,445,000 BTU/HR
MIN: 1,085,000 BTU/HR.
FUEL GAS: 845 - 875 - 1259 BTU/SCF (LHV)
SP. GR: 0.49 - 0.51 - 1.23

1 GAS TIP DRILLED: 6-#51 "MTD" & PORTS @ 90° T
(BASED ON 1259 BTU GAS)

1 FOR: ABADAN PETROLEUM CO.
ABADAN, IRAN

1 REV. 1: REVISED FUEL GAS AS NOTED/APPROVED PRINT (6-27-67) JB

JOBSITE: (ELEV. LESS THAN 1000 FT.)

1 JOB NO. G-5788 (T-6039) REQ. NO.
F.O. NO. G-5788-104 SHOP ORDER 038941

THIS DRAWING AND THE INFORMATION REVEALED BY IT ARE THE PROPERTY OF JOHN ZINK COMPANY. REPRODUCTION OR UNAUTHORIZED USE IS STRICTLY FORBIDDEN.

JOHN ZINK COMPANY
TULSA 4-21-67/100 A OKLAHOMA

DETAIL OF JOHN ZINK MV-5 GAS BURNER
(16-BLOCK)
FOR: THE LUMMUS COMPANY

DRAWN: WEAA
CHECKED: M
SCALE:
APPROVED: Koona
DATE: 3-9-67
DRAWING NO. A-VY-665-1

7-Sauer & Zin